PreGo

School table with castors

Design — Iiro Viljanen

The PreGo student table with lockable castors is a versatile choice for individual and group work in learning environments. Castors make it easy to move and tables can be stacked, if needed. Bag hooks at both ends of the top and rounded corners improve user comfort and safety. The base is also available with fixed glides instead of castors.
The PreGo school desk is available in chipboard or plywood with a choice of colours and laminates. The colour of the base can be customised with shades from Martela's Inspiring Colours range.

MATERIAL DESCRIPTION:

Table top: white, grey, oak or colour laminates, matt laminates, linoleums

Base: epoxy-lacquered steel in white, black or Inspiring Colours

STACKABILITY:

On floor max 4 pcs

FEATURES:

- Lockable castors or glides
- Rounded corners on table tops
- Bagpack hook on both sides
- Stackable
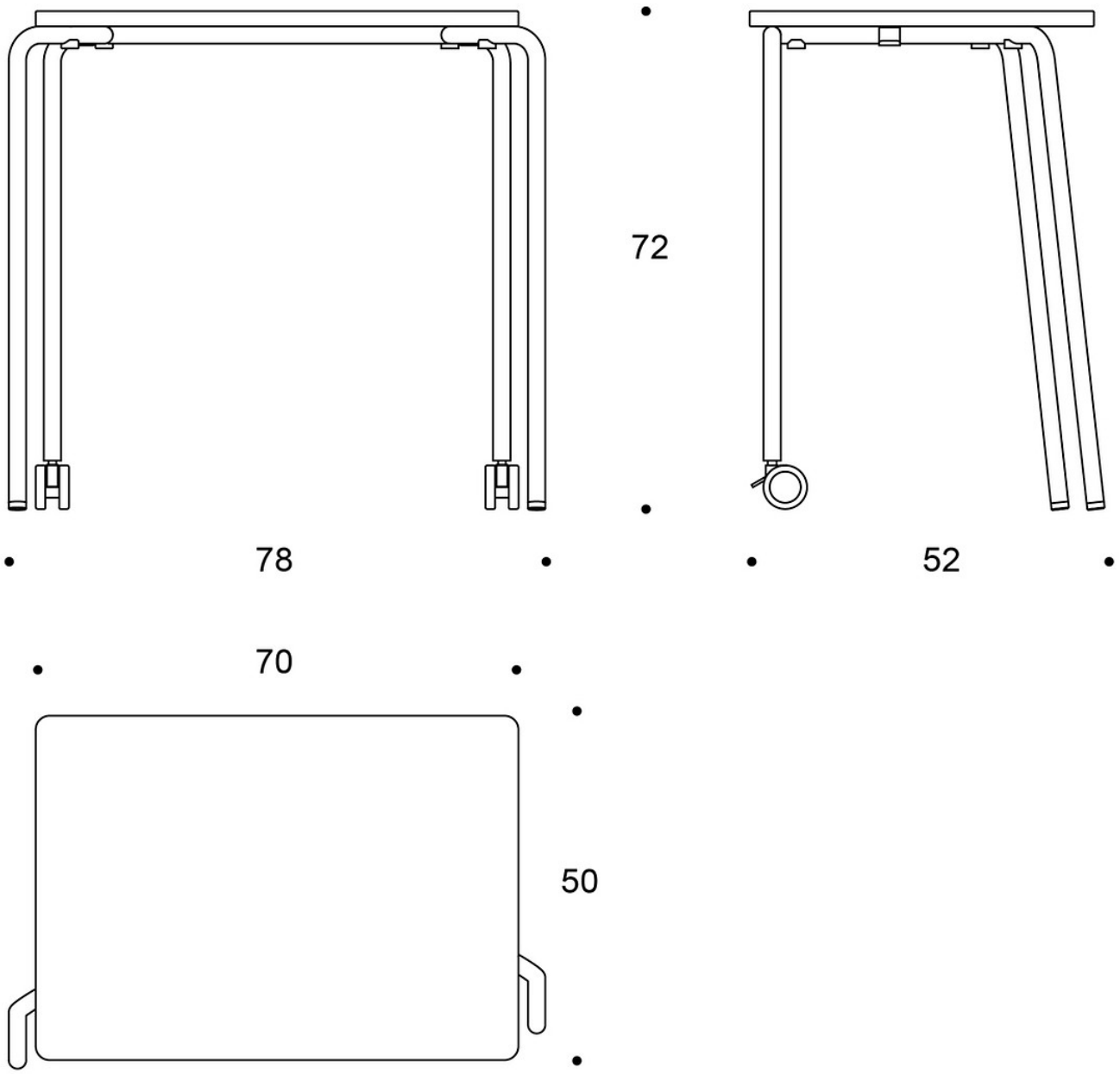
Dimensional drawing: